LVM-125/250

INSTRUCTION MANUAL

10E22

EMERGENCY POWER EQUIPMENT
UNIVERSAL MICRO INVERTER
PURE SINUSOIDAL AC OUTPUT
OUTPUT VOLTAGE AUTO SETTING EQUAL TO INPUT VOLTAGE
AUTO DIMMING (0-10V) OF CONNECTED LOAD

c UL us LISTED 3KLH E95719

BC

IMPORTANT SAFEGUARDS

WHEN USING ELECTRICAL EQUIPMENT, BASIC SAFETY PRECAUTIONS SHOULD ALWAYS BE FOLLOWED, INCLUDING THE FOLLOWING

READ AND FOLLOW ALL SAFETY INSTRUCTIONS

1. To prevent electric shock, switch off the mains power until installation is complete and AC input power is supplied to this product.
2. This product requires an unswitched AC power supply of 120-277V, 50/60Hz.
3. Ensure all connections are in accordance with National Electrical Code or Canadian Electrical Code and all local regulations.
4. To reduce the risk of electrical shock, disconnect both normal power, emergency power supplies and unit connector of this product before servicing.
5. For emergency operation of LED, incandescent, fluorescent fixtures and screw-base lamps.
6. The product has a metallic housing and is suitable for installation in air handling/plenum spaces in accordance with the National Electric Code.
7. Use this product in 0°C minimum, 50°C maximum ambient temperatures (Ta). To ensure the emergency operating time over 90 minutes, the output emergency power of LVM-125 /250 should be maximum of 125W for the LVM-125 and 250W for the LVM-250.
8. Use with grounded, Listed, dry or damp location rated fixtures and the case should be grounded.
9. Do not use outdoors. Do not mount near gas or electric heaters.
10. The use of accessory equipment not recommended by the manufacturer may cause an unsafe condition and void warranty.
11. Do not use this product for other than intended use.
12. Installation and service should be performed by qualified service personnel.
13. This product should be mounted in locations and at heights where it will not readily be subjected to tampering by unauthorized personnel.

LFP

THIS PRODUCT CONTAINS A RECHARGEABLE LITHIUM IRON PHOSPHATE BATTERY. THE BATTERY MUST BE RECYCLED OR DISPOSED OF PROPERLY.

SAVE THESE INSTRUCTIONS

WWW.MYERSEPS.COM
44 South Commerce Way, Bethlehem, PA 18017 Technical Support: 610-868-5400

INSTALLATION

CAUTION: MAKE CERTAIN THE AC POWER IS OFF AND THE LVM-125/250 UNIT CONNECTOR IS DISCONNECTED UNTIL THE INSTALLATION IS COMPLETE.

1. SPECIFICATION OF LVM-125/250

Voltage		Output Power	
Input	Output	LVM-125	LVM-250
120V 60Hz	120V 60Hz	125W	250W
230V 50Hz	230V 50Hz		
277V 60Hz	277V 60Hz		

2. INSTALLING THE LVM-125/250

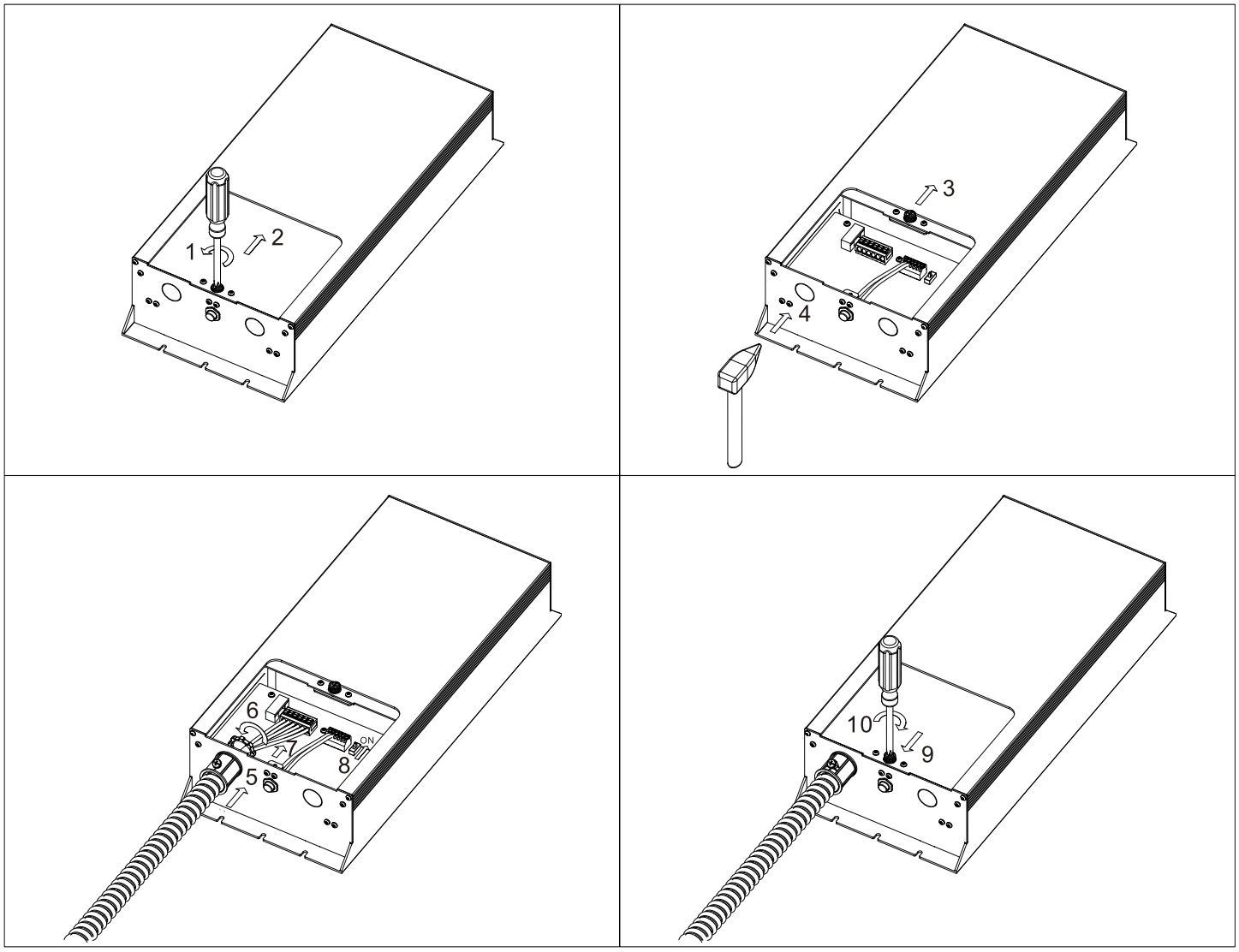

WWW.MYERSEPS.COM
44 South Commerce Way, Bethlehem, PA 18017 Technical Support: 610-868-5400

INSTALLATION

CEILING MOUNTING

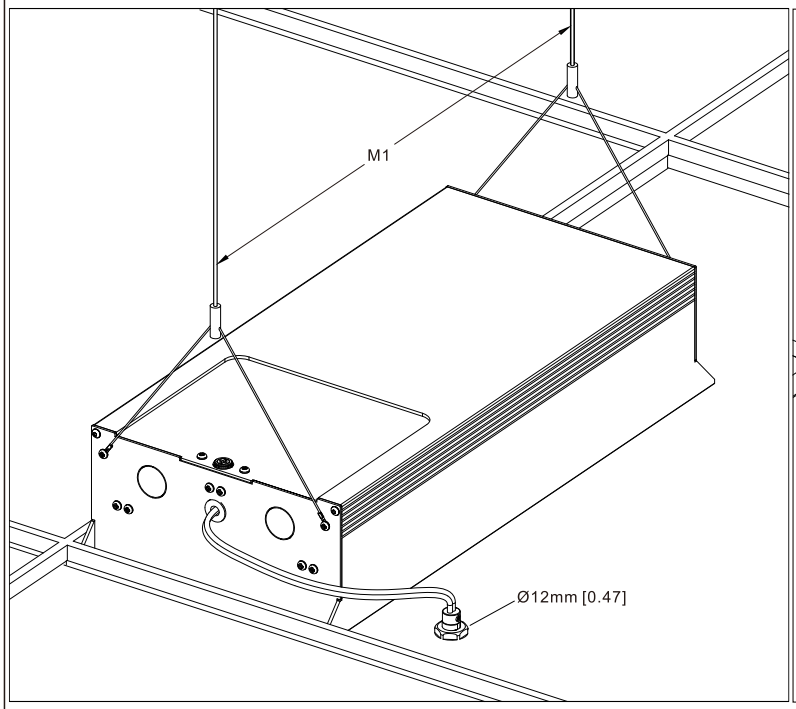

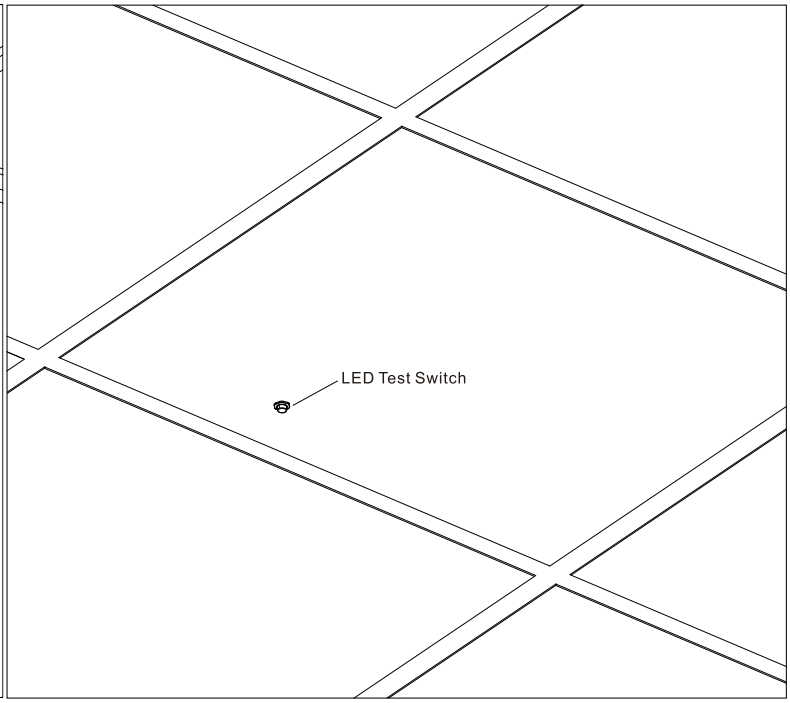

SURFACE MOUNTING

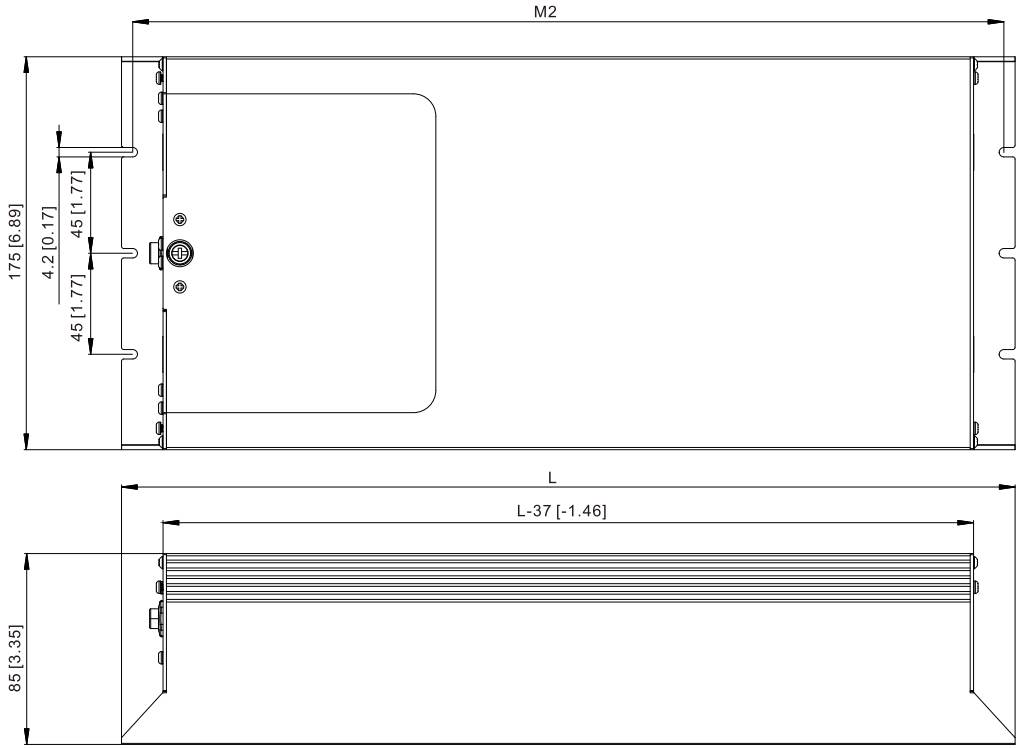

Dimension unit: mm [inch]

Item No.	M1 (Hanging) mm [inch]	M2 (Mounting) mm [inch]	L mm [inch]	W mm [inch]	H mm [inch]	Weight kg [lb]
LVM-125	252 [9.92]	282 [11.10]	292 [11.50]	175 [6.89]	85 [3.35]	4.2 [9.24]
LVM-250	358 [14.09]	388 [15.28]	398 [15.67]	175 [6.89]	85 [3.35]	7.0 [15.4]

WIRING

CAUTION: DO NOT MATE UNIT CONNECTOR UNTIL INSTALLATION IS COMPLETE AND AC POWER IS SUPPLIED.

1. The LVM-125/250 requires an unswitched AC power supply of 120-277 volt, 50/60Hz.
2. Refer to the wiring diagrams below.
3. Consult the factory for other wiring diagrams.

WIRING DIAGRAM FOR 0-10V DIMMABLE EMERGENCY LIGHTING SYSTEM

MAX. DIMMABLE LOAD = 1200W @120V
= 2500W @277V

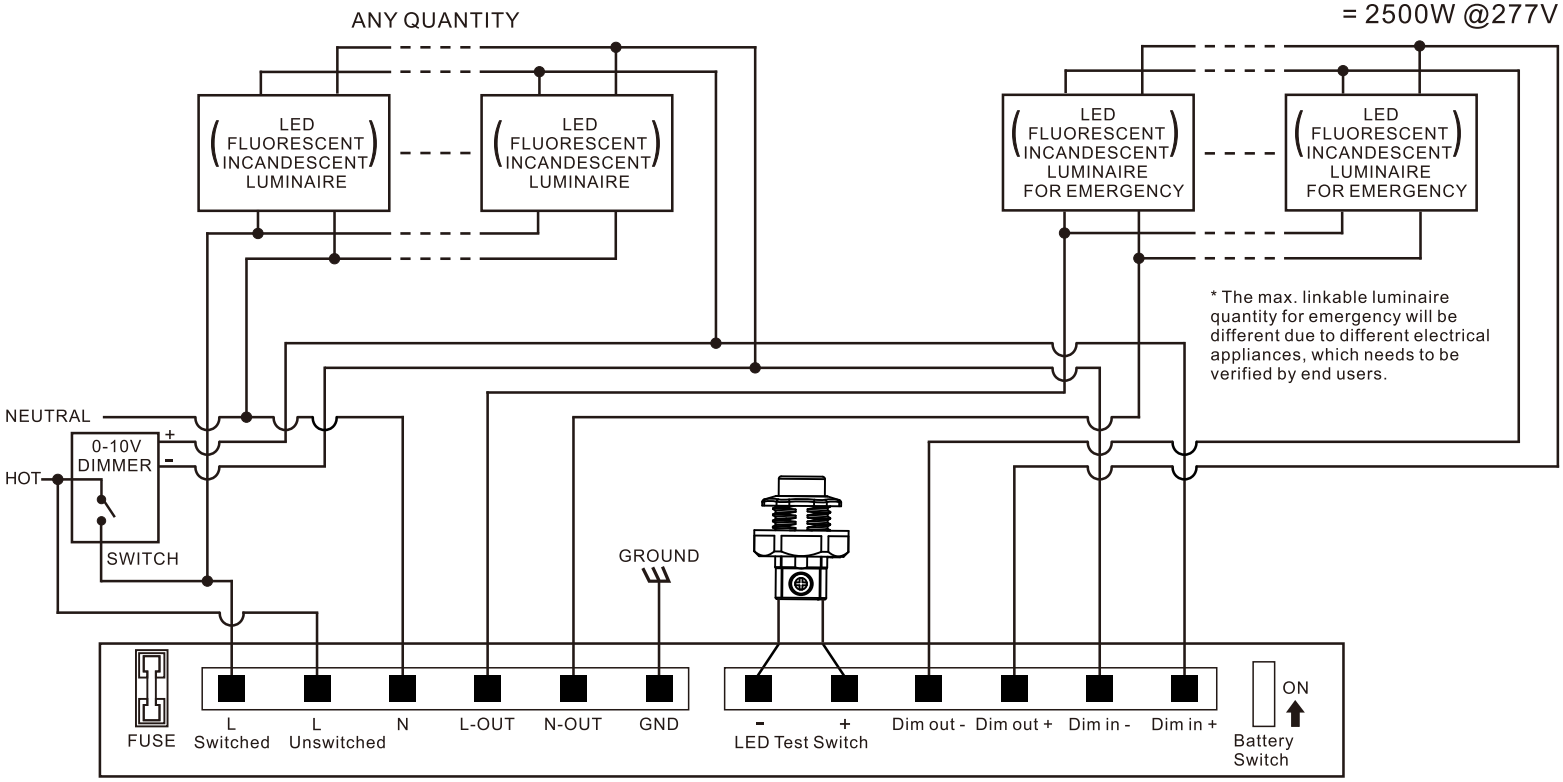

WIRING DIAGRAM FOR NON-DIMMABLE EMERGENCY LIGHTING SYSTEM

MAX. POWER = 125W (LVM-125)
= 250W (LVM-250)

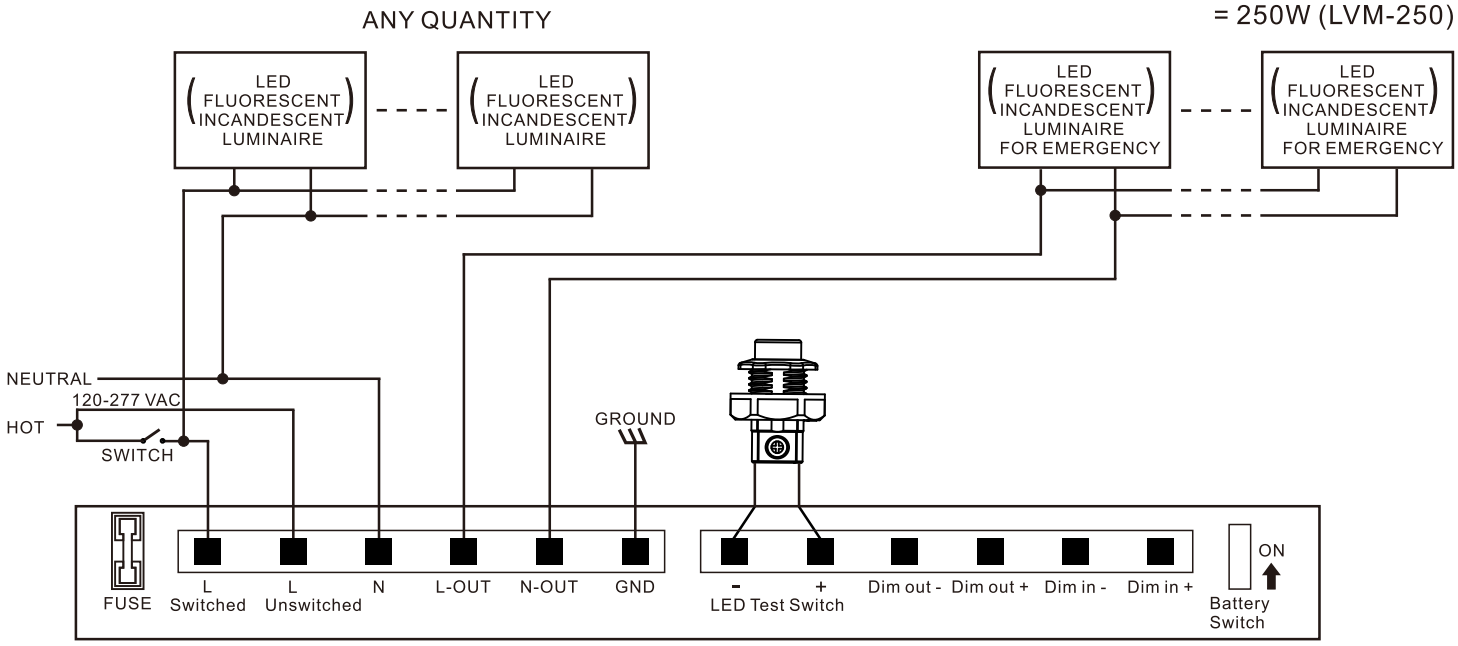

WWW.MYERSEPS.COM
44 South Commerce Way, Bethlehem, PA 18017 Technical Support: 610-868-5400

OPERATION / TESTING / MAINTENANCE

OPERATION

When AC power is applied, the LED test switch is illuminated, indicating that the batteries are being charged. When AC power fails, the LVM-125/250 automatically switches to emergency power, operating the lighting load at rated emergency power. During power failure, the LED test switch will be off. When the AC power is restored, the LVM-125/250 switches the system back to normal mode of operation and resumes battery charging. The minimum emergency operation time is 90 minutes. A short term discharge test may be conducted after unit has been charging for 1 hour. The charging time for the full discharged battery of LVM-125 is 12 hours, of LVM-250 is 24 hours.

TESTING AND MAINTENANCE

The following Periodic testing is recommended to ensure the system is working correctly.

1. Visually inspect the LED test switch (LTS) monthly. It should be illuminated when AC power is applied.
2. Conduct a 30-second discharge test by switching off the emergency breaker every month. The LTS will be off.
3. Conduct a 90-minute discharge test once per year. The LTS will be off during the test.

AUTO TEST

This LVM-125/250 has an Auto Test feature which saves cost by reducing the need for manual testing.

1. Initial Auto Test
   When the system is connected properly and powered on **(make sure the load is switched on)**, the LVM-125/250 will perform an Initial Auto Test. If any abnormal conditions exist, the LTS will blink quickly. Once the abnormal condition is corrected, the LTS will function correctly. The Initial Auto Test will be restarted automatically when the connected dimmable loads' maximum power increases.
2. Preprogrammed Scheduled Auto Test

a) The LVM-125/250 will conduct the first Monthly Auto Test after 24 hours and up to 7 days after initial power on. Then monthly tests will be performed every 30 days.

b) Annual Auto test will occur every 52 weeks after initial power on.

- Monthly Auto Test
  The Monthly Auto Test shall be executed every 30 days, and will test:
  Normal to emergency transfer function, emergency, charging and discharging conditions are normal.
  Monthly test time is approximately 60 seconds.
- Annual Auto Test
  Annual Auto Test will occur every 52 weeks after the initial 24 hours full charge, and will test:
  Proper initial battery voltage, 90-minute emergency operation and acceptable battery voltage at the end of the full 90-minute test.

If the Auto Test is interrupted by a power failure, a full 90-minute Auto Test will occur again 24 hours after the power is restored. If the power failure causes the battery to fully discharge, the product will restart the Initial Auto Test and Preprogrammed Scheduled Auto Test.

MANUAL TEST

1. Press the LTS one time to simulate emergency mode for 10 seconds.
2. Press the LTS 2 times continuously within 3 seconds to force a 60-second monthly test. After the test is completed, the next (30-day) monthly test will count from this date.
3. Press the LTS 3 times continuously within 3 seconds to force a 90-minute annual test. After the test is completed, the next (52-week) annual test will count from this date. Note: Prior to conducting annual test, the LVM-125/250 must be charged for 24 hours.
4. In normal mode, press and hold the LTS for greater than 3 seconds to restart Initial Auto Test.
5. During any manual test, press and hold the LTS for greater than 3 seconds to terminate a manual test. The Preprogrammed Scheduled Auto Test time will not change.

LED TEST SWITCH CONDITIONS

LTS Slow Blinking: Normal Charging
LTS On: Battery Fully Charged - Normal Condition
LTS Off: Power Failure
LTS Gradual Change: In Testing Mode
LTS Quickly Blinking: Abnormal Condition - Corrective Action Required

WWW.MYERSEPS.COM
44 South Commerce Way, Bethlehem, PA 18017 Technical Support: 610-868-5400